PHOENIX
THE RETAIL BRAND

TECHNICAL DATA SHEET

Range:	Showering Solutions
Type:	Shower Suite 8 - Wall Arm
Code:	SST801 SST817 SST833 SST849 SST865
Version/Date:	v1 01/26

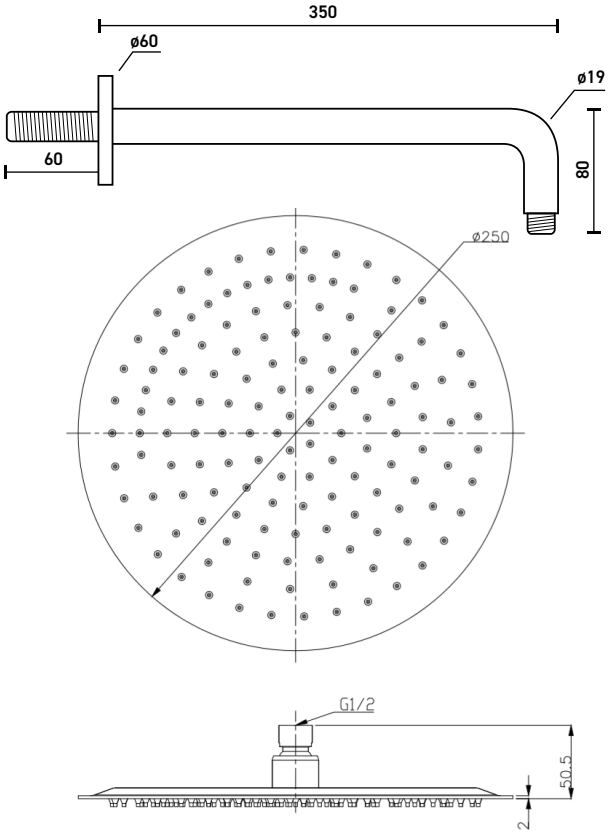

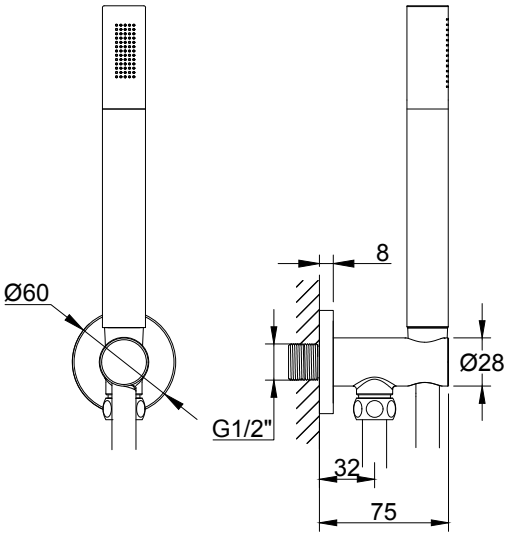

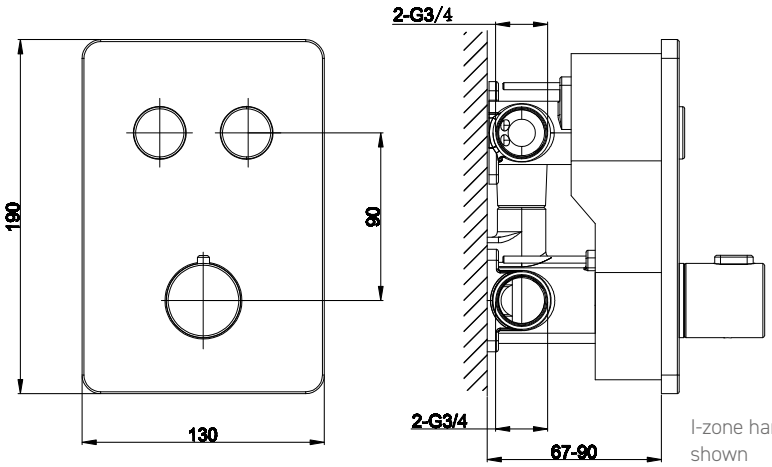

I-zone handle shown

Information:
High Pressure. Vernet Cartridge. Installer Note: Please be aware that if this valve is being installed with a pump, a negative head version is required to ensure the flow switches detect the valve being turned on.

Guarantee/Aftercare: During installation extra care must be taken to avoid damaging the fittings. We provide a guarantee against faulty manufacture or materials (excluding serviceable parts), providing they have been installed, cared for and used in accordance with our instructions and good plumbing practice. We recommend that all brassware is installed to allow access to serviceable parts as we cannot accept responsibility in the event that access is required.

Finishes:

Various

Phoenix Whirlpools Ltd. Unit 8, Leeds 27 Industrial Estate, Bruntcliffe Ave. Morley, Leeds LS27 0LL
Tel: 0113 201 2260 Email: sales@phoenix-uk.com Web: www.phoenix-uk.com

Notes: Drawings may not be to scale. All dimensions in mm unless otherwise stated. Information correct at time of printing but subject to change at any time.