PHOENIX®

THE RETAIL BRAND

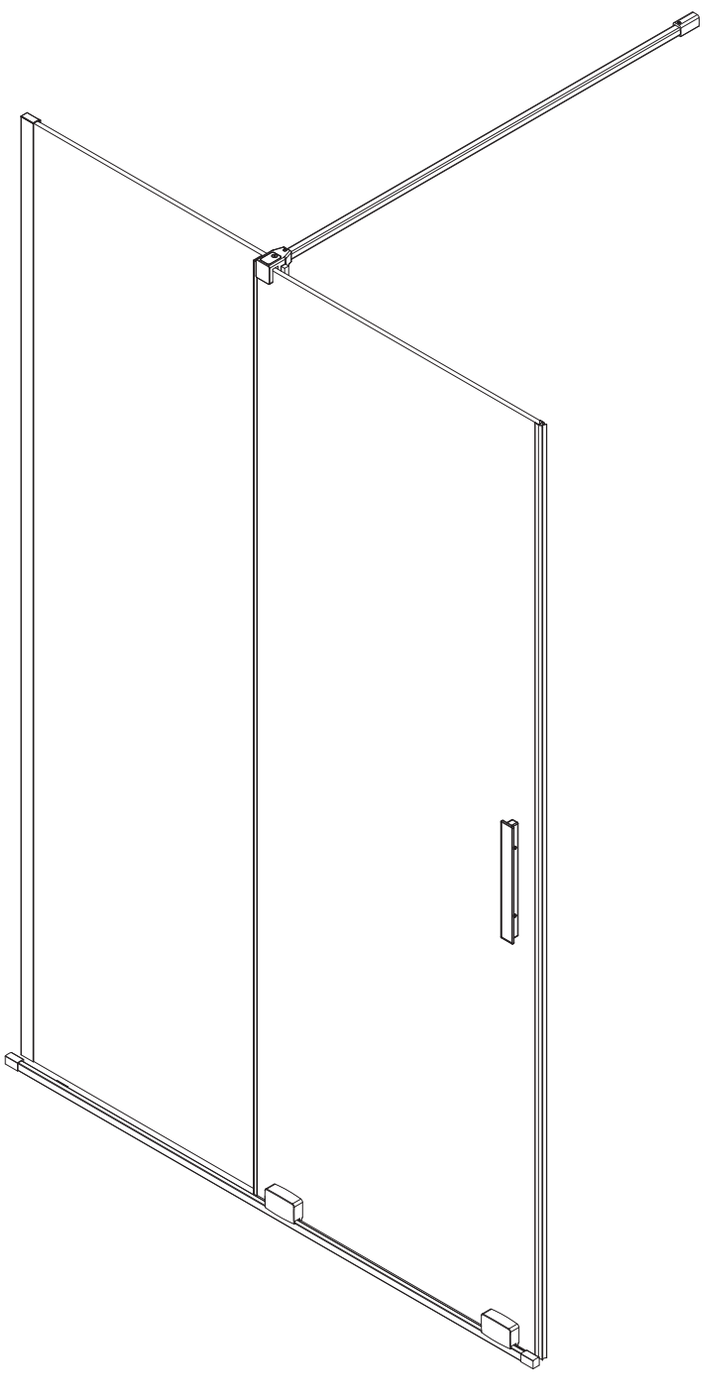

Pensato

V7

◆ General Information

Please inspect the product immediately upon receipt for transit damage, missing packs/ parts or manufacturing fault. Damage reported later cannot be accepted. Please handle the product with care avoiding knocks and shock loading to all sides and edges of the glass.

Note: Safety glass cannot be re-worked

Please read these instructions carefully before start of installation Special care should be taken when drilling walls to avoid hidden pipes or electrical cables Note: This product is heavy and may require two people to install.

Aftercare instructions

After use, your shower should be cleaned with soap and water. This is particularly important in hard water areas where insoluble lime salts may be deposited and allowed to build up. Cleaners of a gritty or abrasive nature should not be used. Care should be taken to avoid contact with strong chemicals such as organic solvents and strippers.

Shower Tray Requirements

This product is designed to be installed on any Phoenix Shower Tray and requires a minimum flat edge of 50mm to 65mm - This enclosure can also be installed on wetroom floors and flat top shower trays.

Please keep these instructions for aftercare and customer service details

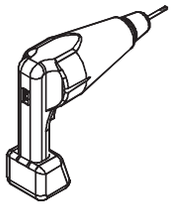

DRILL

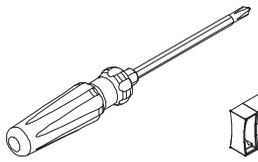

SCREWDR

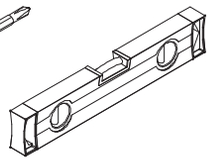

LEVEL

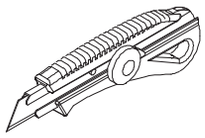

PRECISION KNIFE

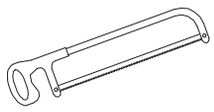

HACKSAW



SILICONE

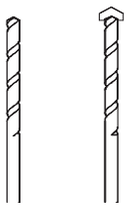

DRILLBITS
Ø3.2 Ø6

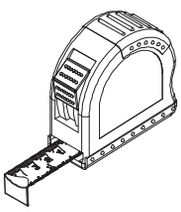

MEASURING TAPE

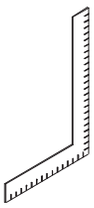

SET SQUARE



PENCIL

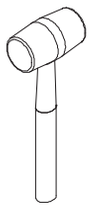

MALLET

Assembly Drawing

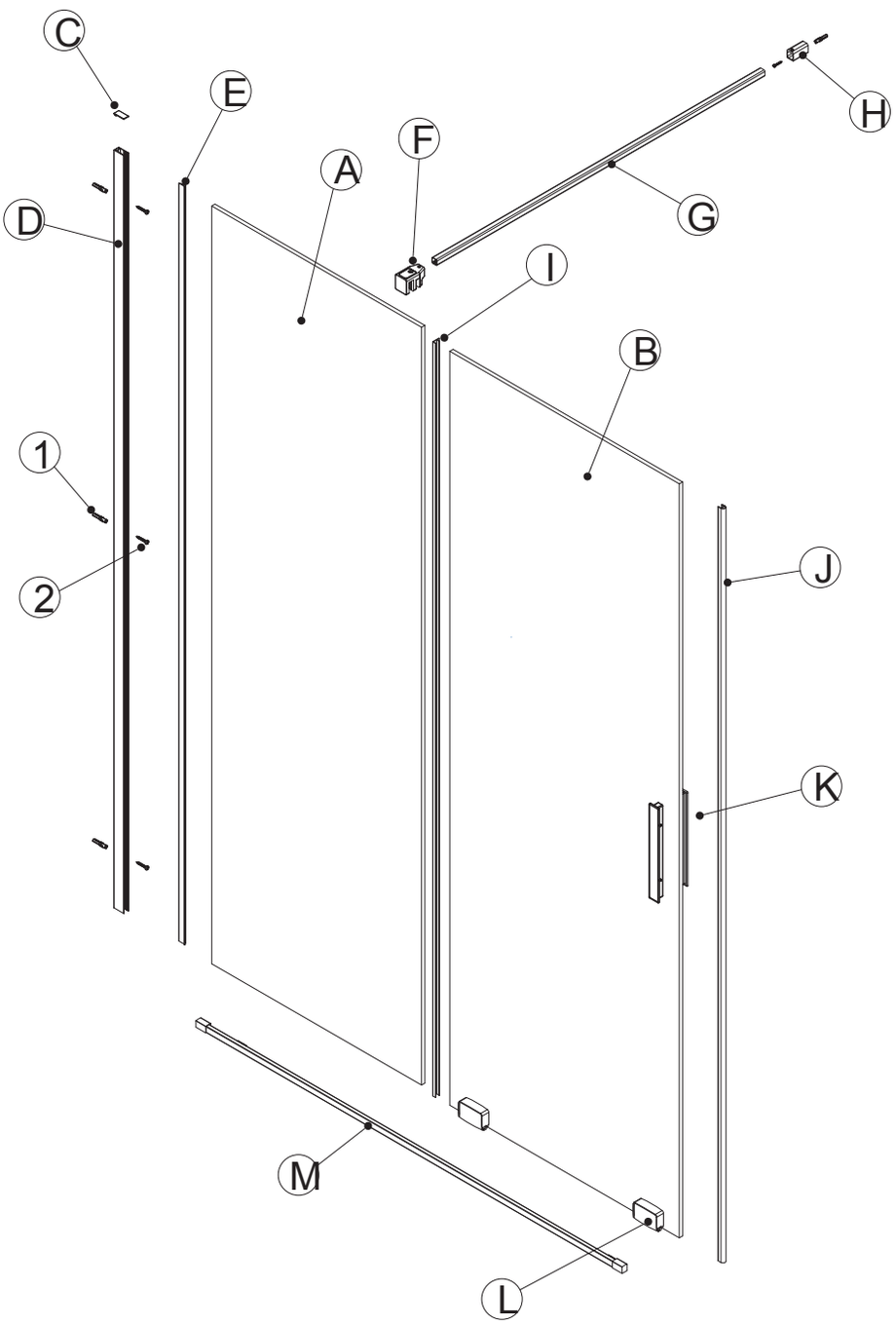

1

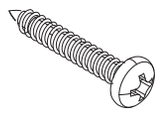

4X30
4PCS

2

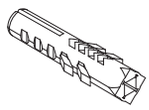

Ø6X30
4PCS

A

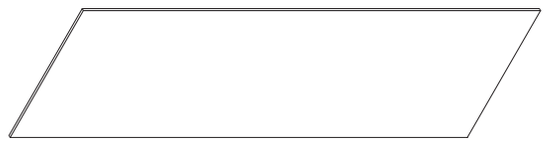

1PC

B

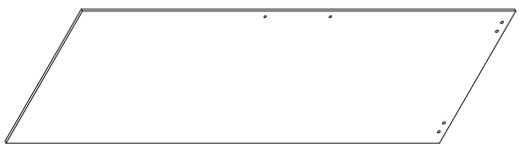

1PC

C

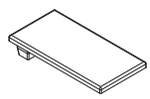

1PC

D

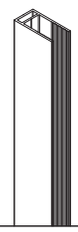

1PC

E

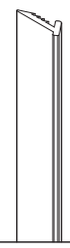

1PC

F

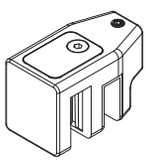

1set

G

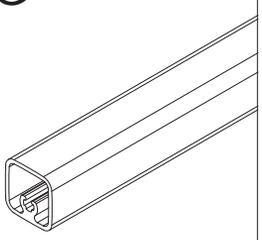

1PC

H

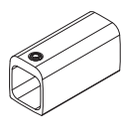

1PC

I



1PC

J

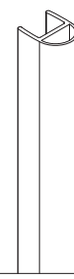

1PC

K

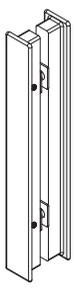

1sets

L

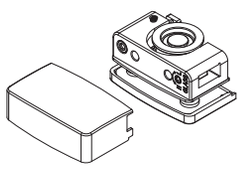

2sets

M

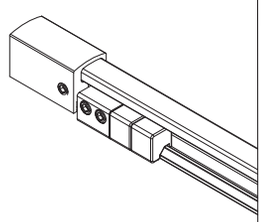

1sets

N

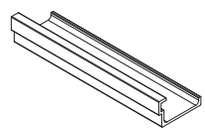

2PC

O

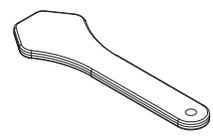

1PC

P



1PC



This product is heavy and may require two people to install.



Please read these instructions carefully before starting the installation. Special care should be taken when drilling walls to avoid hidden pipes or electrical cables.

Note:This product is heavy and may require two people to install.

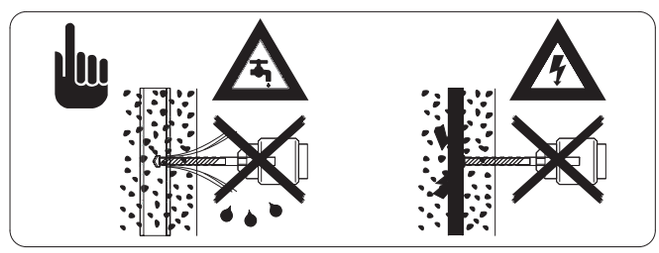

1

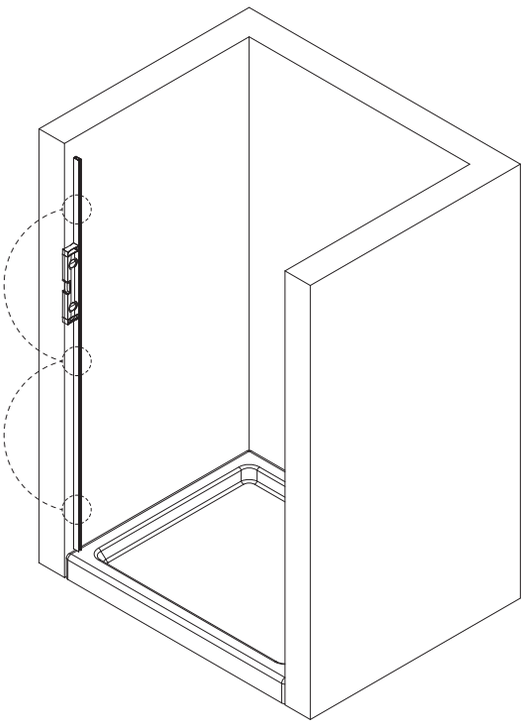

1.1

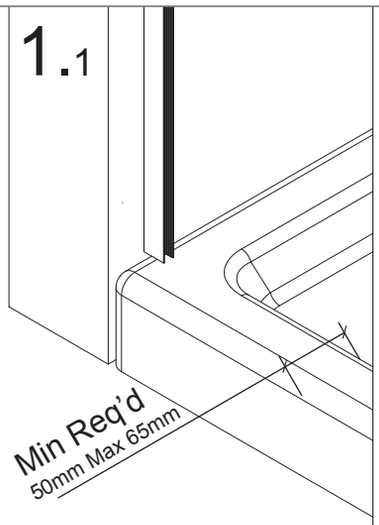

1.2

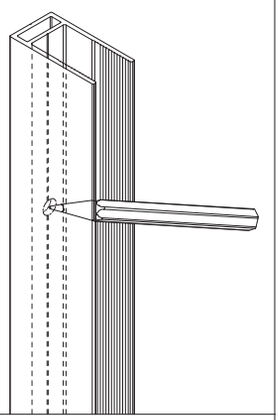

1.3

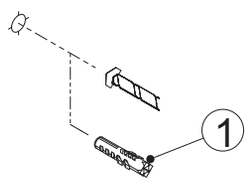

6mm dia. holes with drill bit suitable for wall surface

1.4

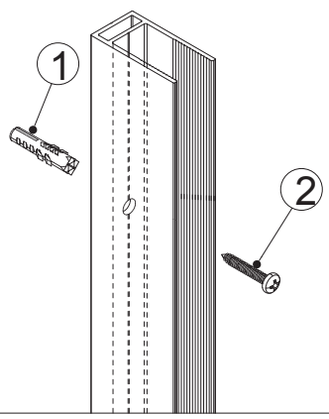

2

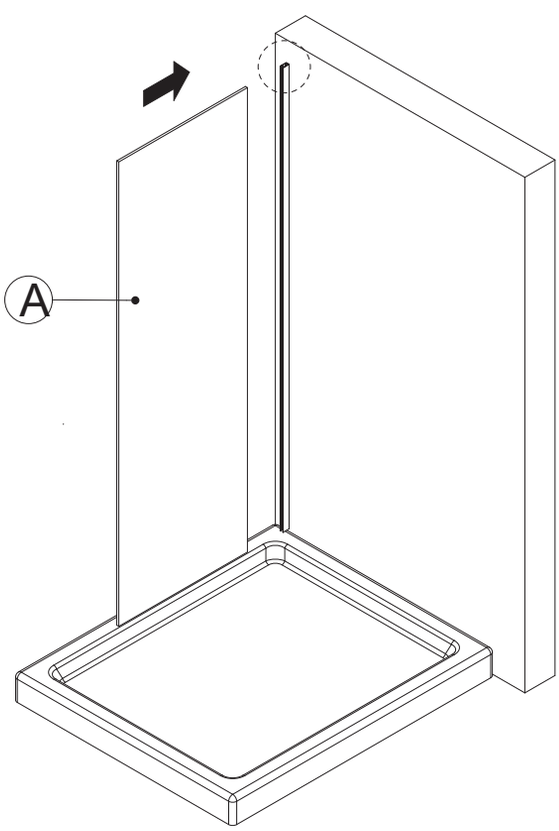

2.1

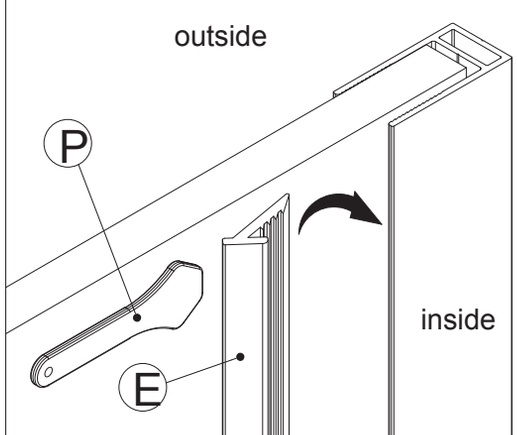

2.2

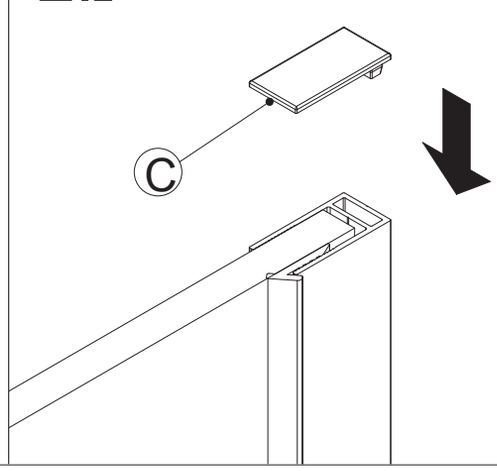

3

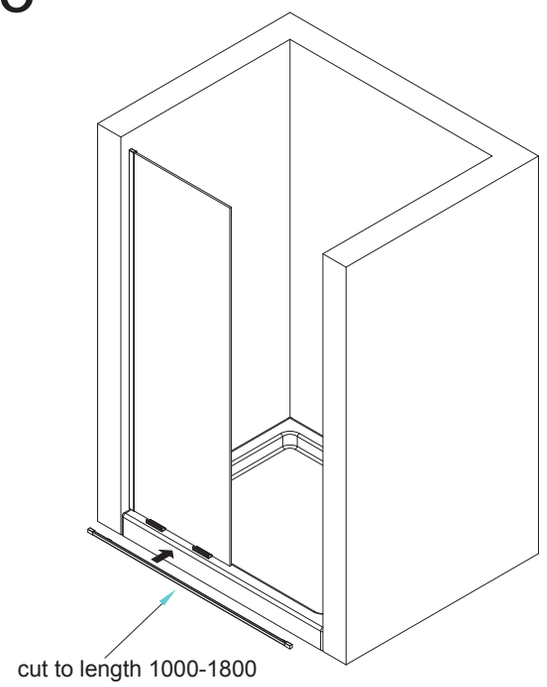

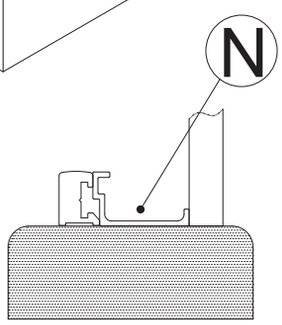

3.1

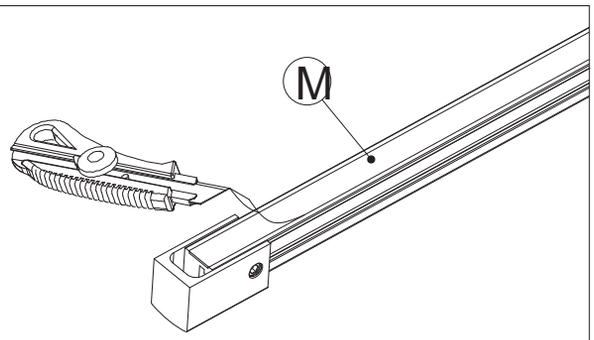

3.2

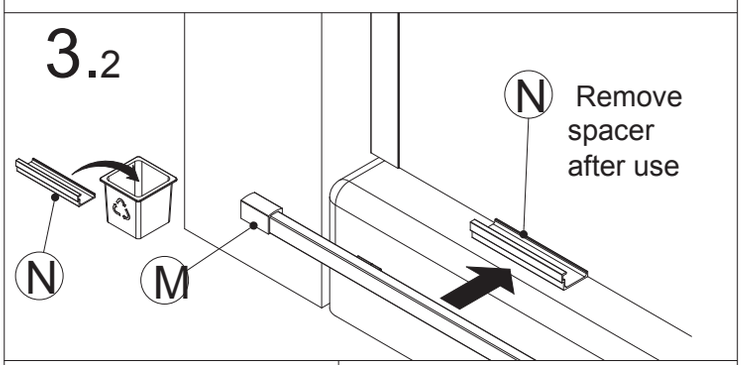

3.3

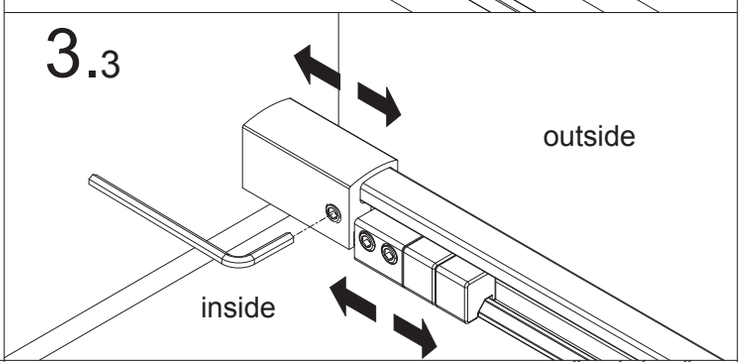

4

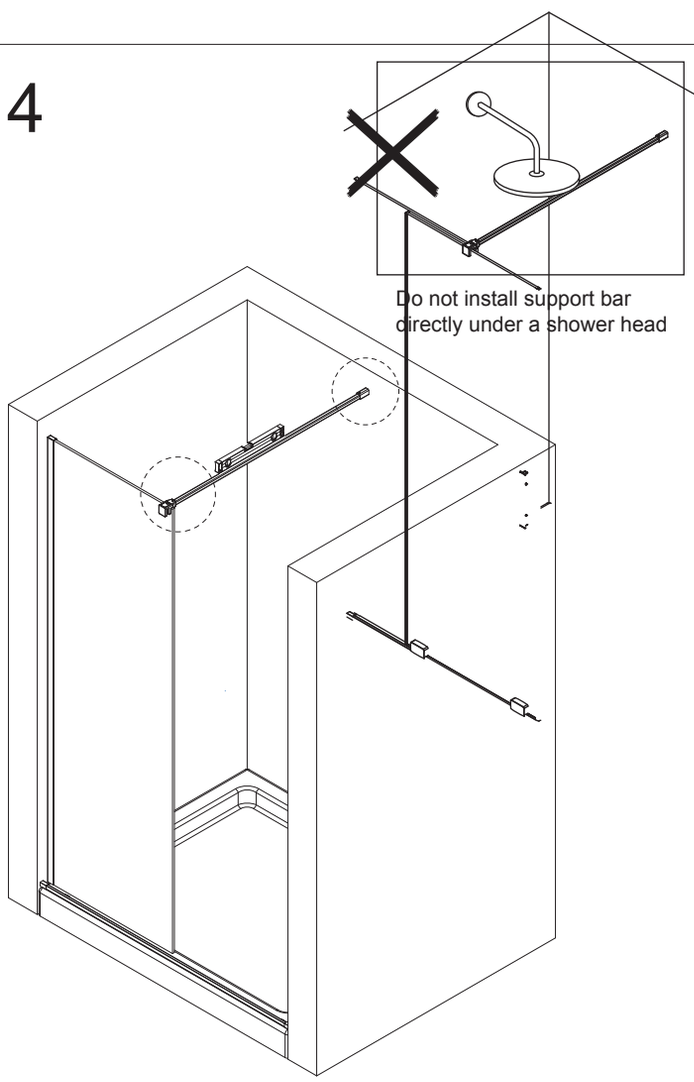

4.1

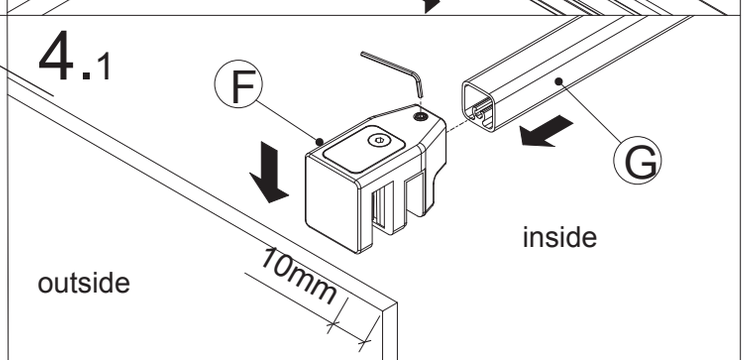

4.2

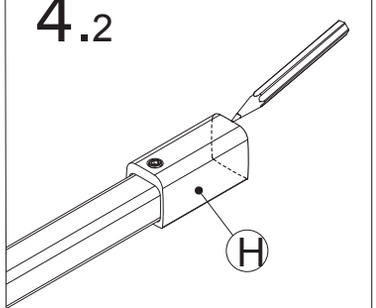

4.3

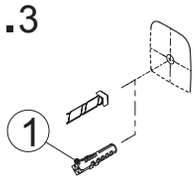

6mm dia. holes with drill bit suitable for wall surface

4.4

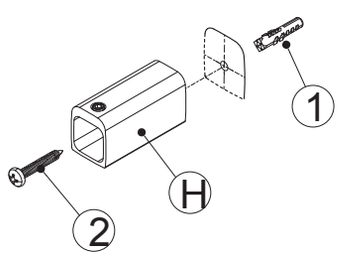

5

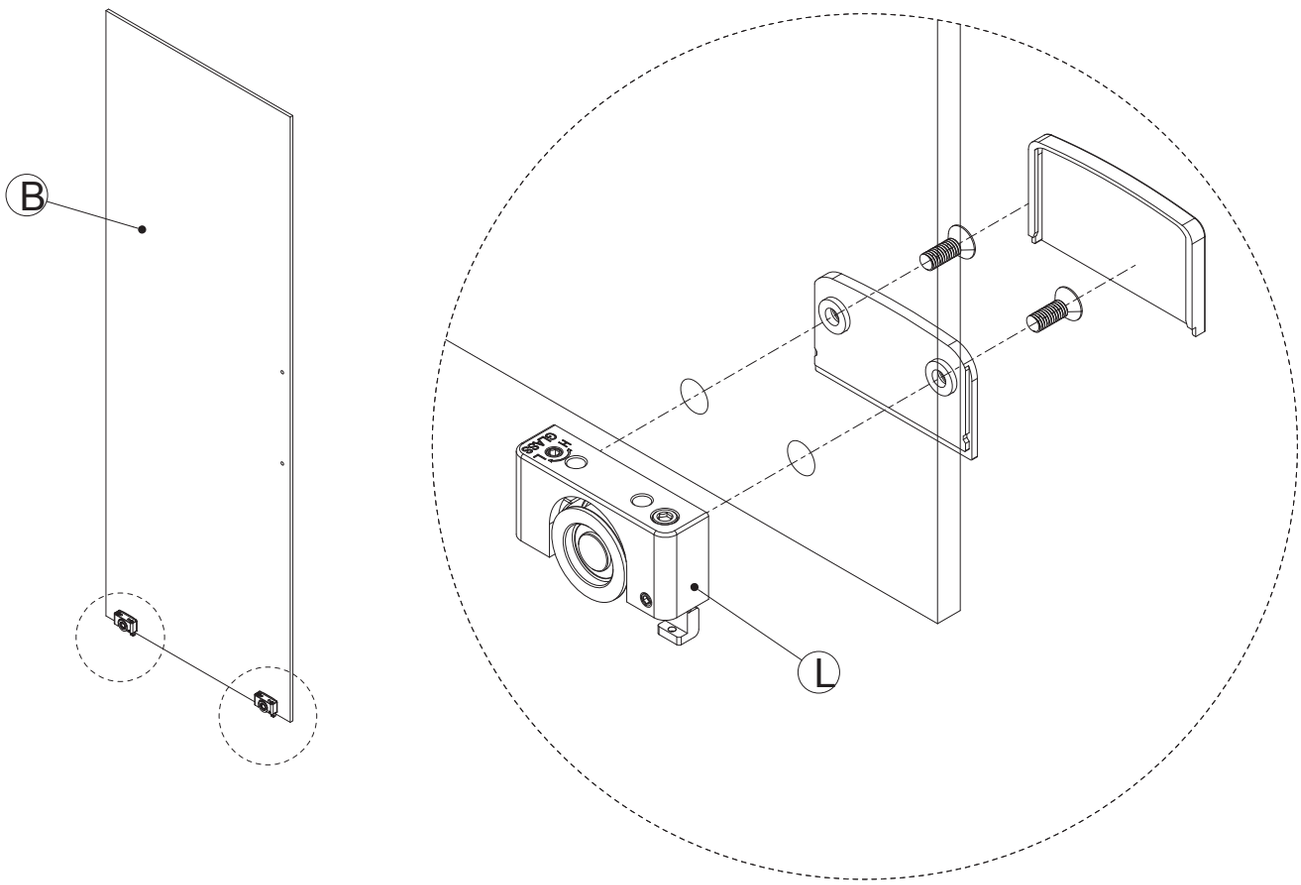

6

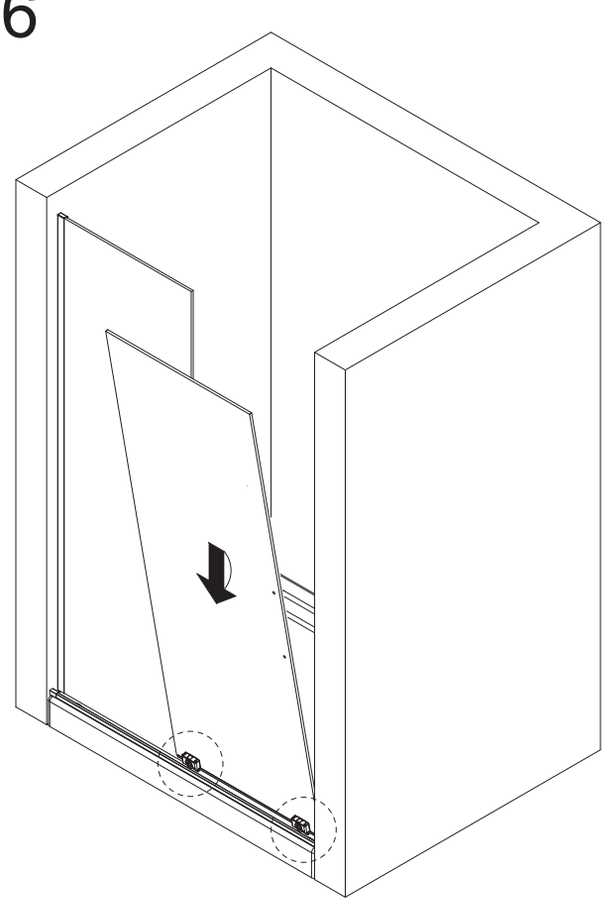

6.1

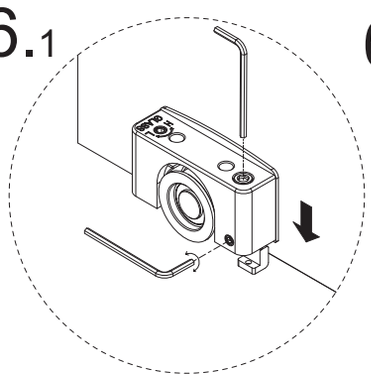

6.2

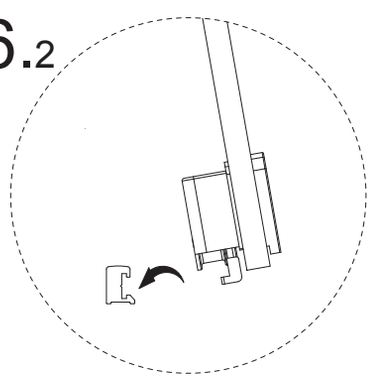

6.4

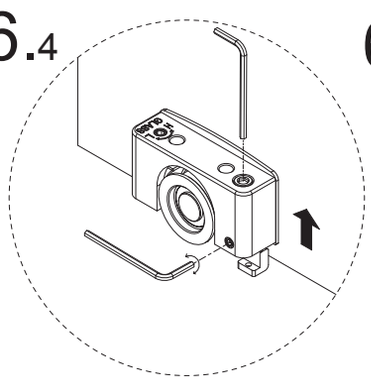

6.3

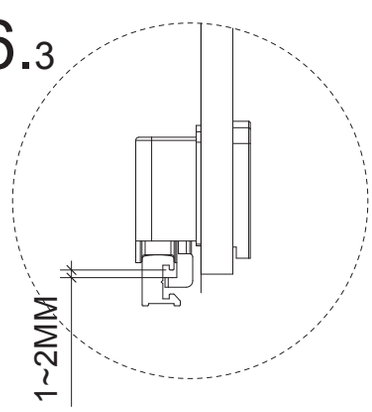

7

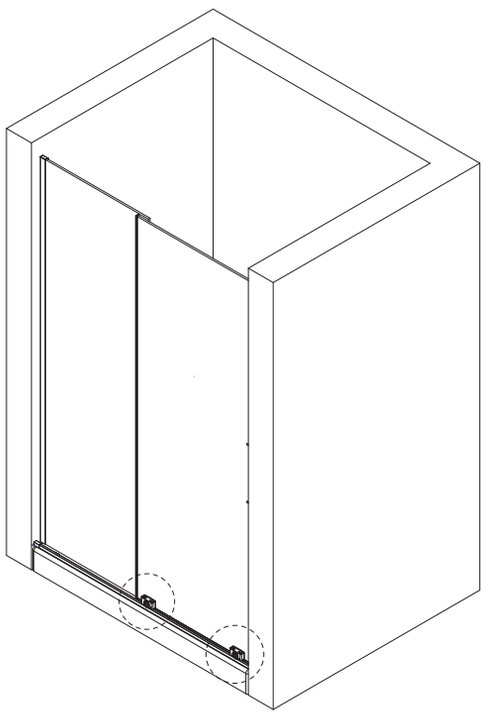

7.1

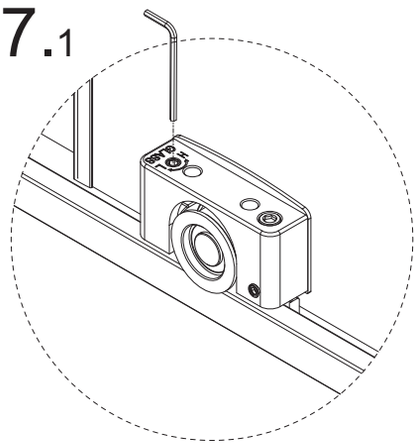

7.2

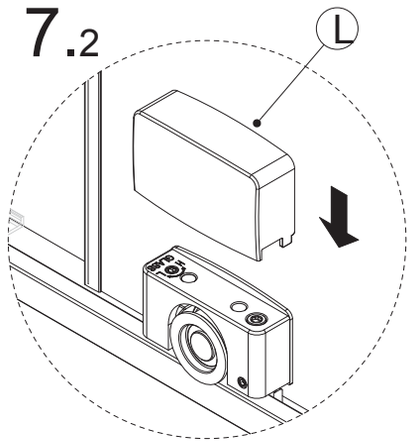

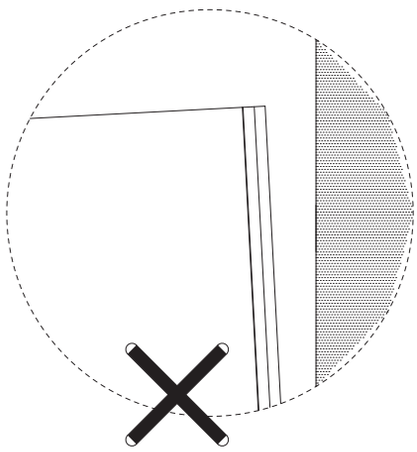

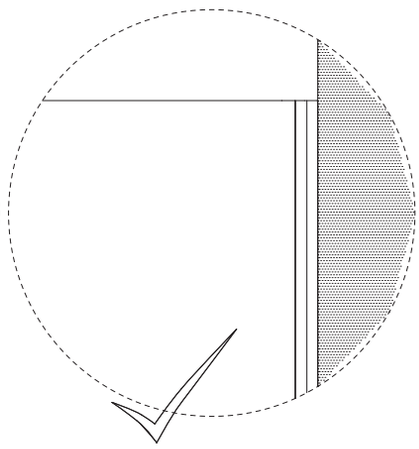

8

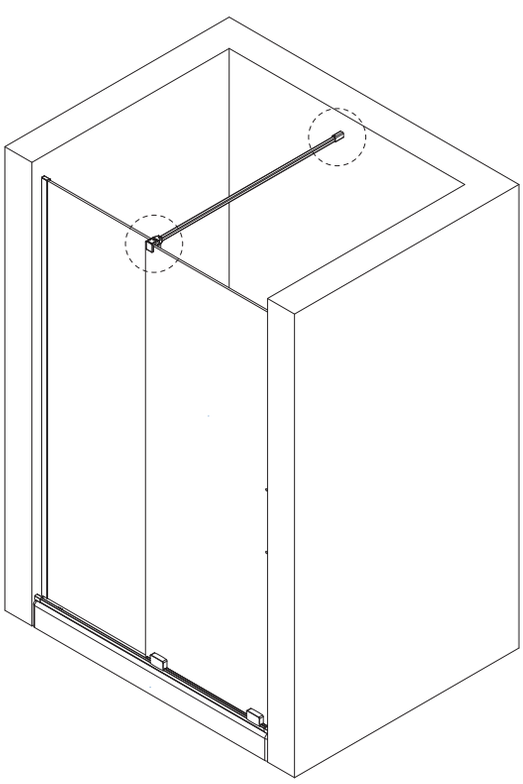

8.1

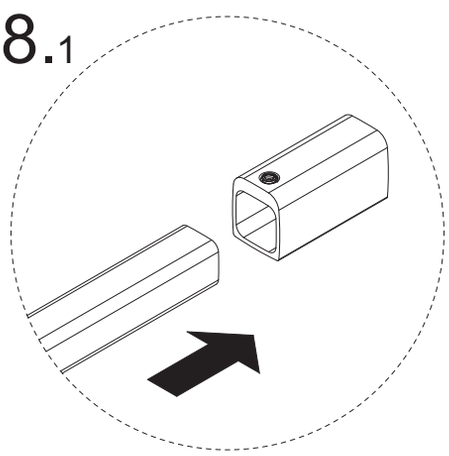

8.2

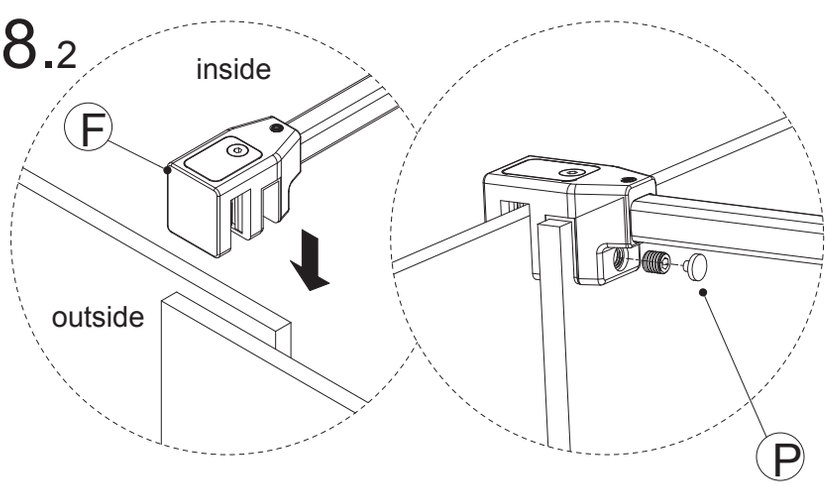

9

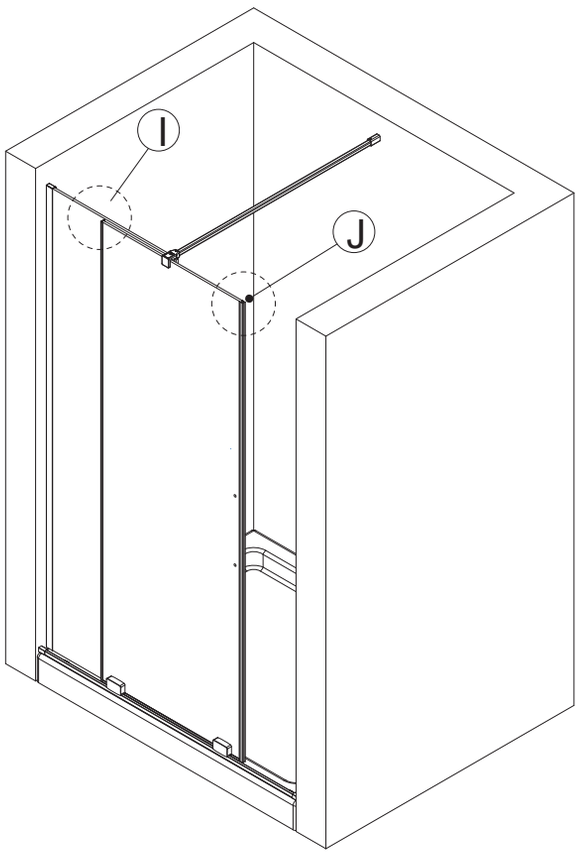

9.1

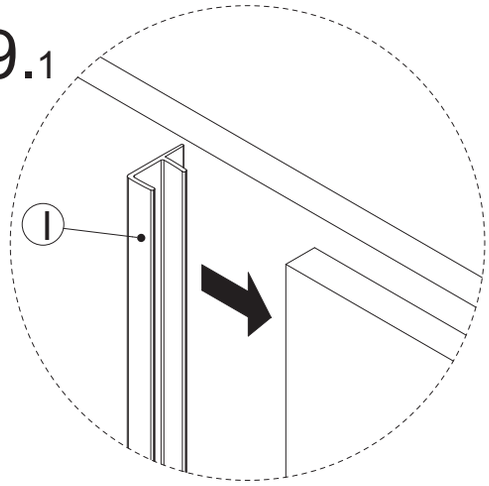

9.2

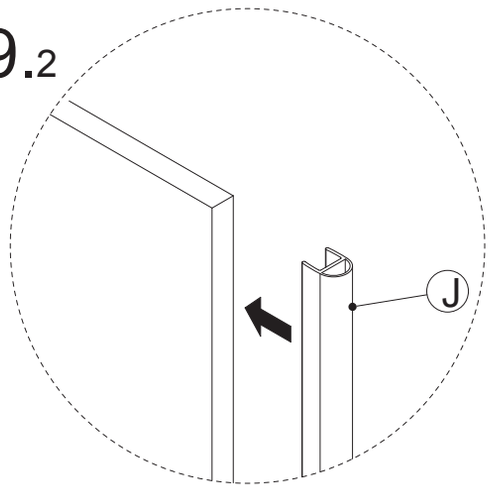

10

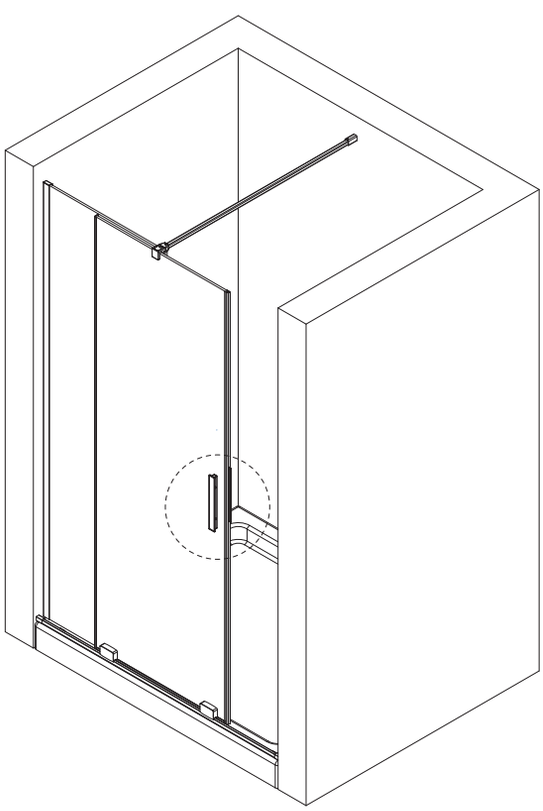

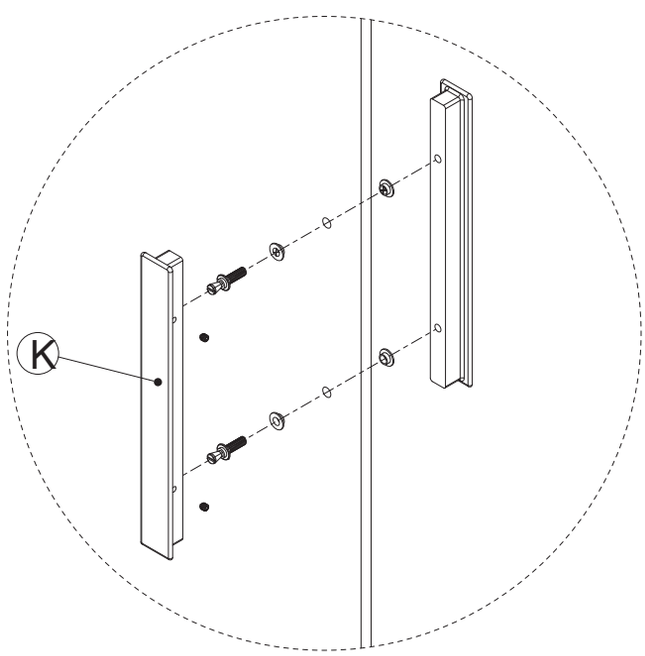

11



