# Phoenix

DESIGNED FOR **YOU**

Technical Data Sheet

| | |
|---|---|
| **Range:** | Luxury Baths |
| **Type:** | Nice |
| **Code:** | BH016 |
| **Version/Date:** | v2 06/20 |

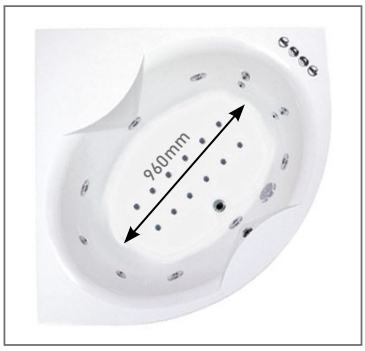

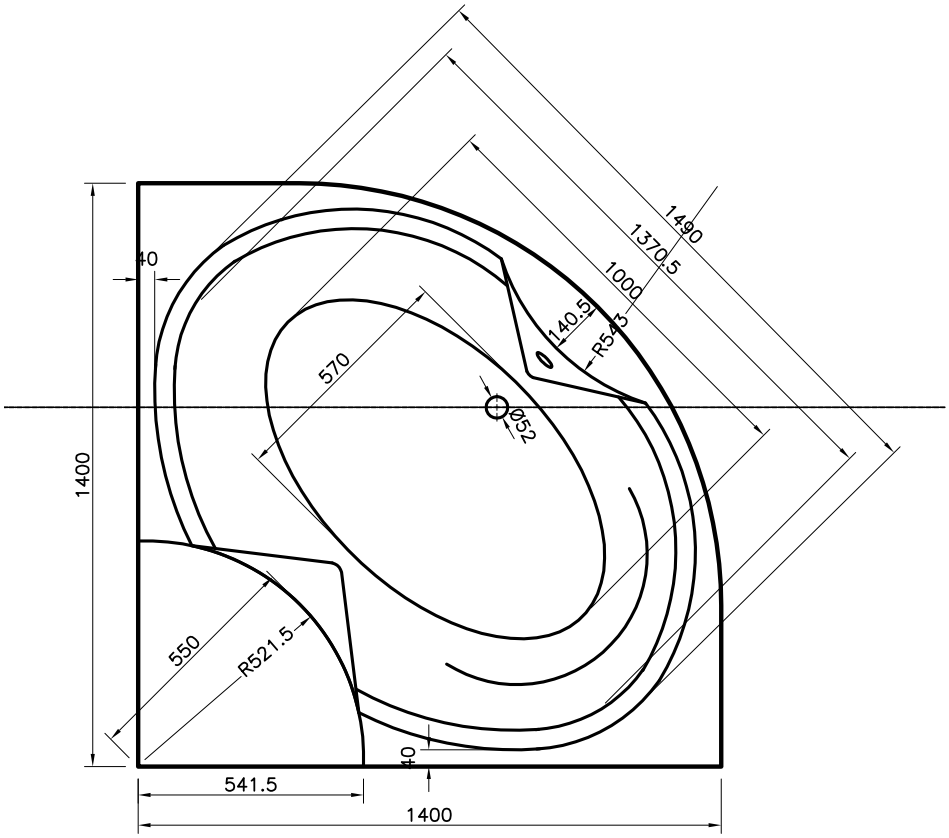


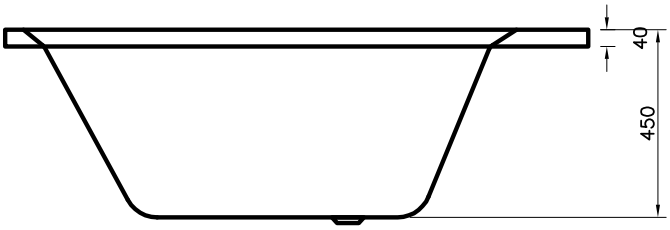


Information:

Capacity 270L. Includes panel - Height 570mm.

Finishes:

White

Guarantee/Aftercare: During installation extra care must be taken to avoid damaging the fittings. We provide a guarantee against faulty manufacture or materials (excluding serviceable parts), providing they have been installed, cared for and used in accordance with our instructions and good plumbing practice. All products installed in a commercial environment carry a 12 month guarantee. We cannot be held responsible for the use of incorrect dimensions shown for first fix without the actual products on site.
In line with the CE standards for this type of product, there may be a manufacturers tolerance of approximately +/- 2% on the overall dimensions and finish on these products. As per our terms and conditions of guarantee, we cannot be held responsible for the use of dimensions shown for first fix without the actual products on site. All dimensions stated are nominal and are subject to manufacturing tolerances.

**Phoenix Whirlpools Ltd. Scott Lane, Off Bruntcliffe Road, Morley, Leeds LS27 0NQ**
Tel: (Sales) +44 (0)113 2012260 Fax: +44 (0)113 2012268 Email: sales@phoenix-uk.co.uk Web: www.phoenix-uk.co.uk

Notes: Drawings may not be to scale. All dimensions in mm unless otherwise stated. Information correct at time of printing but subject to change at any time.